IRON WORLD™
Residential, Commercial & Industrial Fencing Solutions

9390 Davis Avenue
Howard County, MD20723
Phone:(301)776-7448
Toll Free:1-866-210-2747
Fax:(301)776-7677
www.ironworldfencing.com

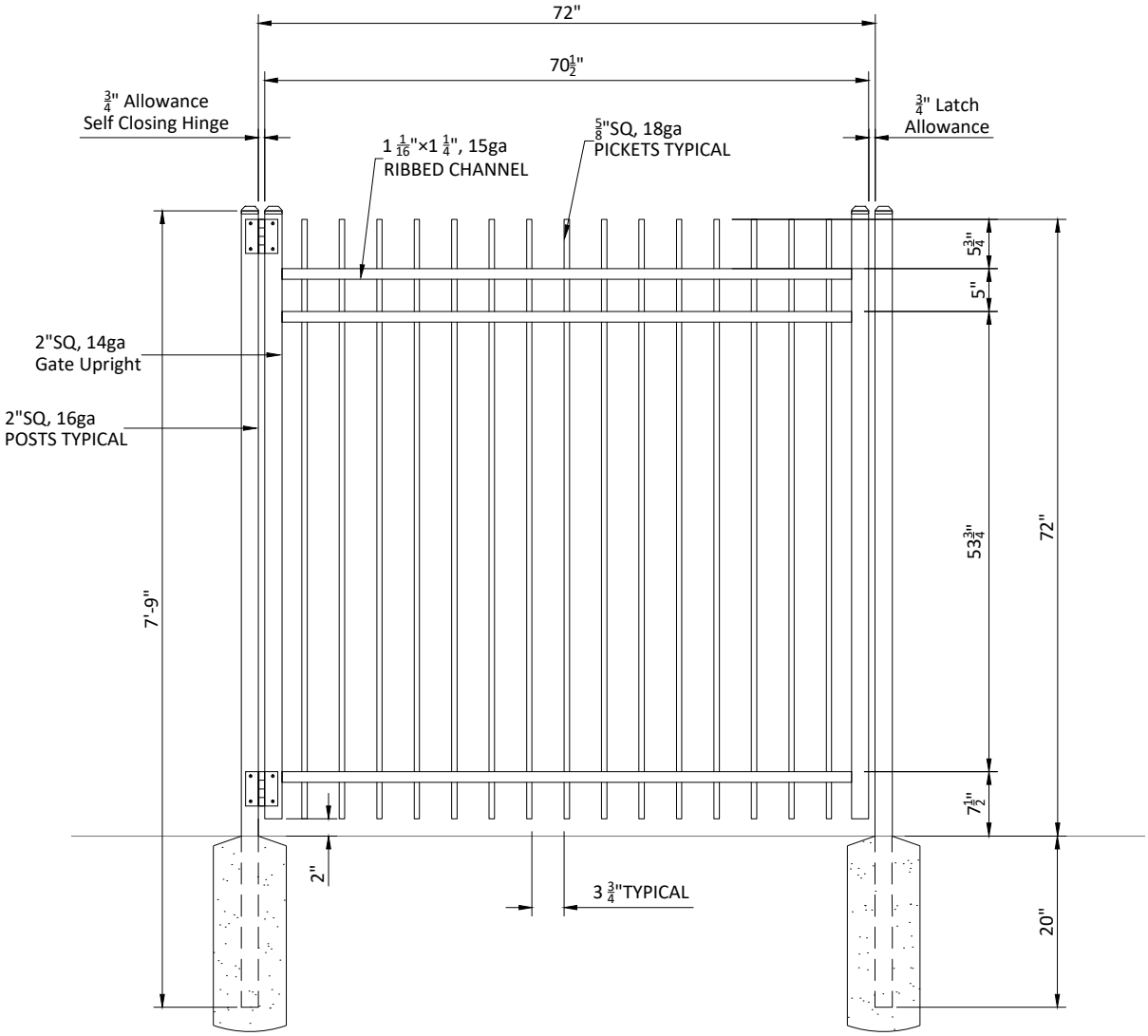

NOTES:
1. GATE SHOWN WITH OUR SELF CLOSING STANDARD HARDWARE.
2. OTHER GATE HARDWARE COULD CHANGE LATCH AND HINGE CLEARANCE.
3. ALL HARDWARE SHIPPED LOOSE AND FIELD INSTALLED.

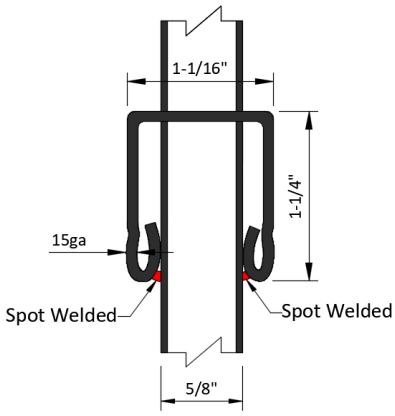

Steel Posts
- ☐ 2" x 2" x 5'9" H
- ☐ 2" x 2" x 6'9" H
- ☐ 2" x 2" x 7'9" H
- ☐ 2" x 2" x 8'9" H

MAVERICK™ SUPREME
RESIDENTIAL STEEL

6H X 6W - MSS Canterbury Residential-3R Black - STEEL SWING GATE

PT# MSSRS-RGFT7272C3-BK