INTERLOCKING BOARDS SECTION DETAIL

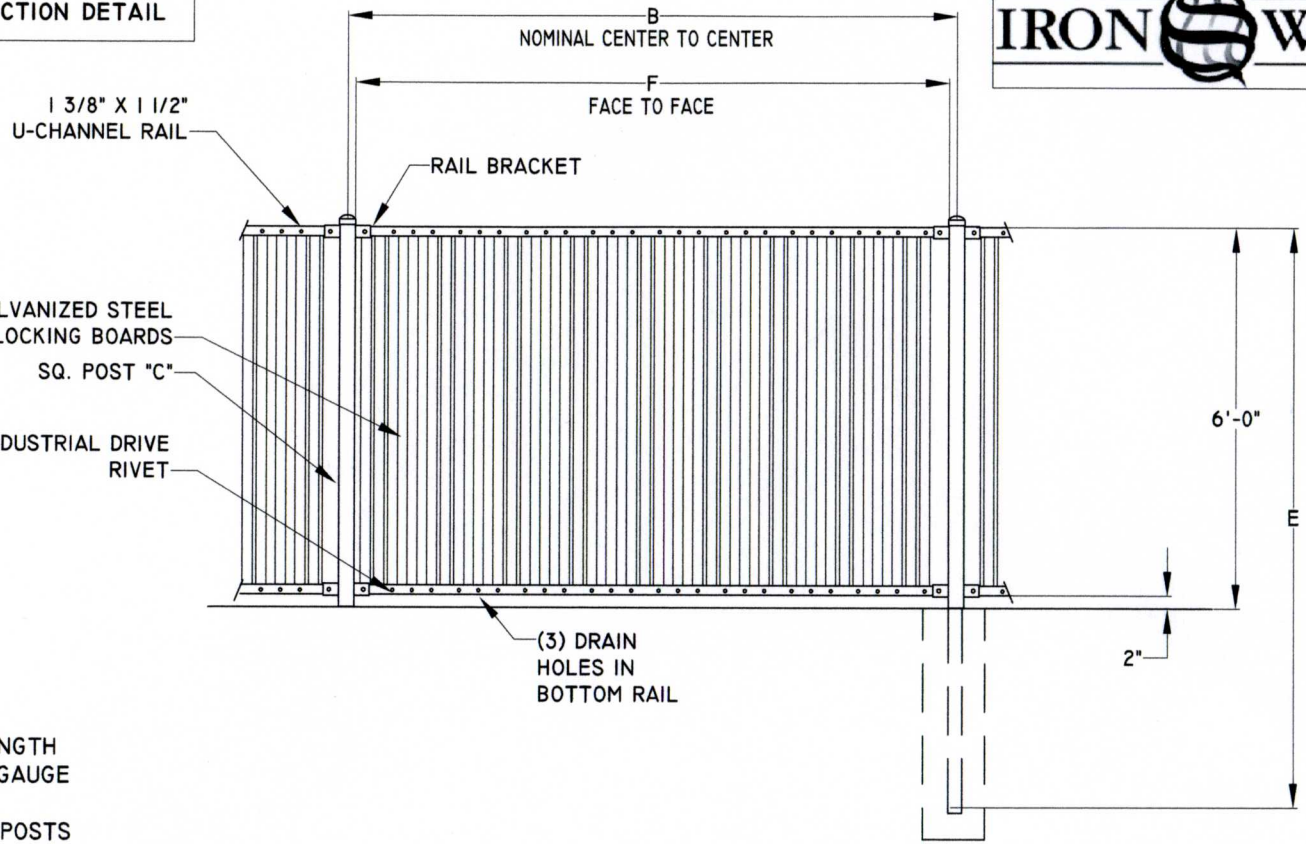

NOM HEIGHT (A)
3' - 0"
3' - 6"
4' - 0"
5' - 0"
6' - 0"
7' - 0"
8' - 0"

B ____ " NOM SECTION LENGTH
C ____ " POST SIZE ____ GAUGE
E ____ " POST LENGTH
F ____ " FACE TO FACE OF POSTS

FENCE SECTION SPECIFICATIONS

NOTES:

1. SPECIFICATIONS SHOWN CAN BE CHANGED ONLY BY THE MANUFACTURER.
2. FOOTING WIDTH TO BE (4) X POST WIDTH.

SUBMITTED BY:	SUBMITTED TO:	PRIVACY FENCE 8' SECTIONS	CONTRACTOR	IRONWORLD FENCING.COM
			ARCHITECT	
		JOB/PROJECT	ENGINEER	DWG NO. IWF 0000

INTERLOCKING BOARDS SECTION DETAIL

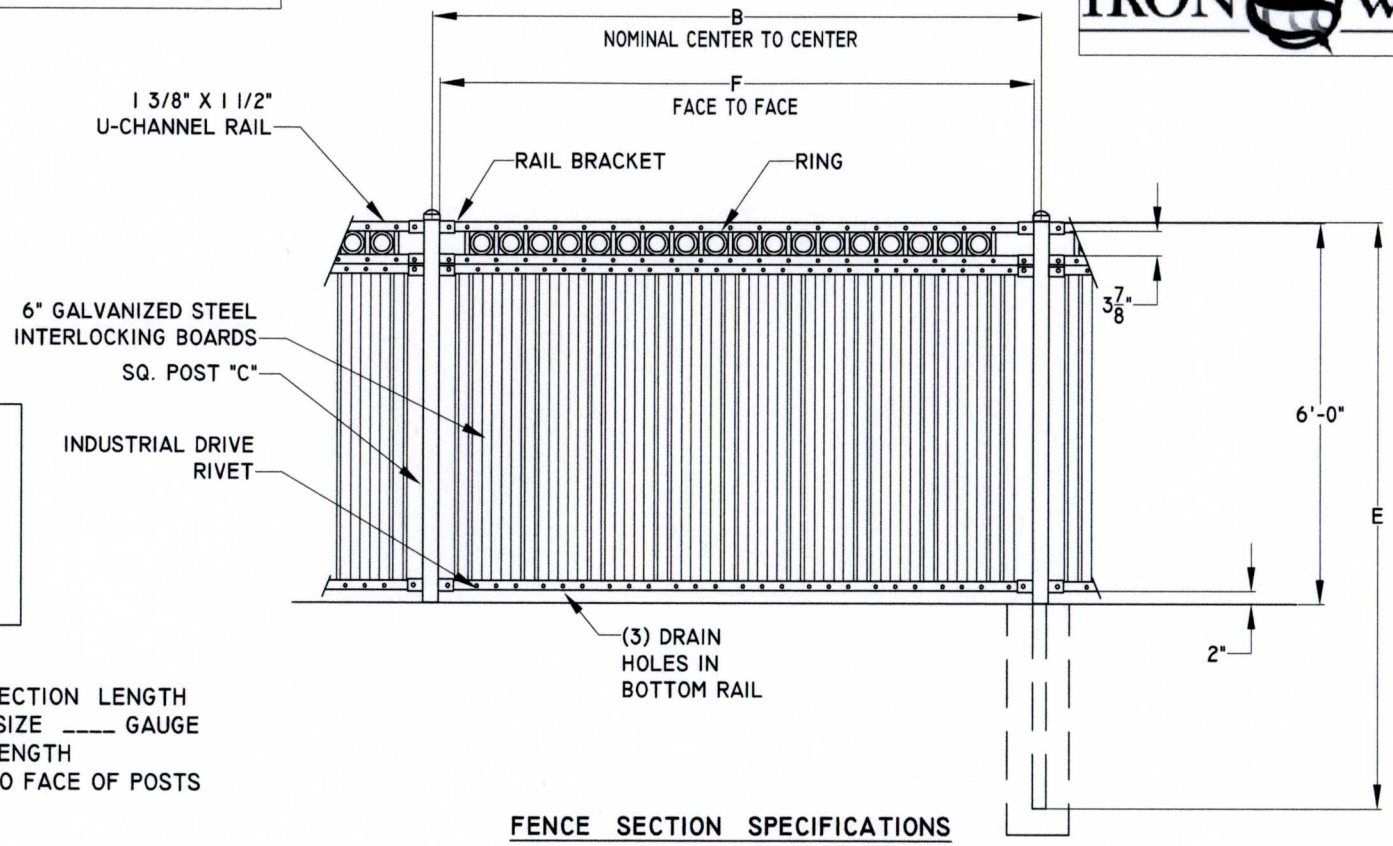

NOM HEIGHT (A)
3' - 0"
3' - 6"
4' - 0"
5' - 0"
6' - 0"
7' - 0"
8' - 0"

B ____ " NOM SECTION LENGTH
C ____ " POST SIZE ____ GAUGE
E ____ " POST LENGTH
F ____ " FACE TO FACE OF POSTS

FENCE SECTION SPECIFICATIONS

NOTES:

1. SPECIFICATIONS SHOWN CAN BE CHANGED ONLY BY THE MANUFACTURER.
2. FOOTING WIDTH TO BE (4) X POST WIDTH.

SUBMITTED BY:	SUBMITTED TO:	PRIVACY FENCE - PLUS 1 ROW OF RINGS 8' SECTIONS	CONTRACTOR	IRONWORLD FENCING.COM
			ARCHITECT	
		JOB/PROJECT	ENGINEER	DWG NO. IWF 0000

INTERLOCKING BOARDS SECTION DETAIL

IRON WORLD

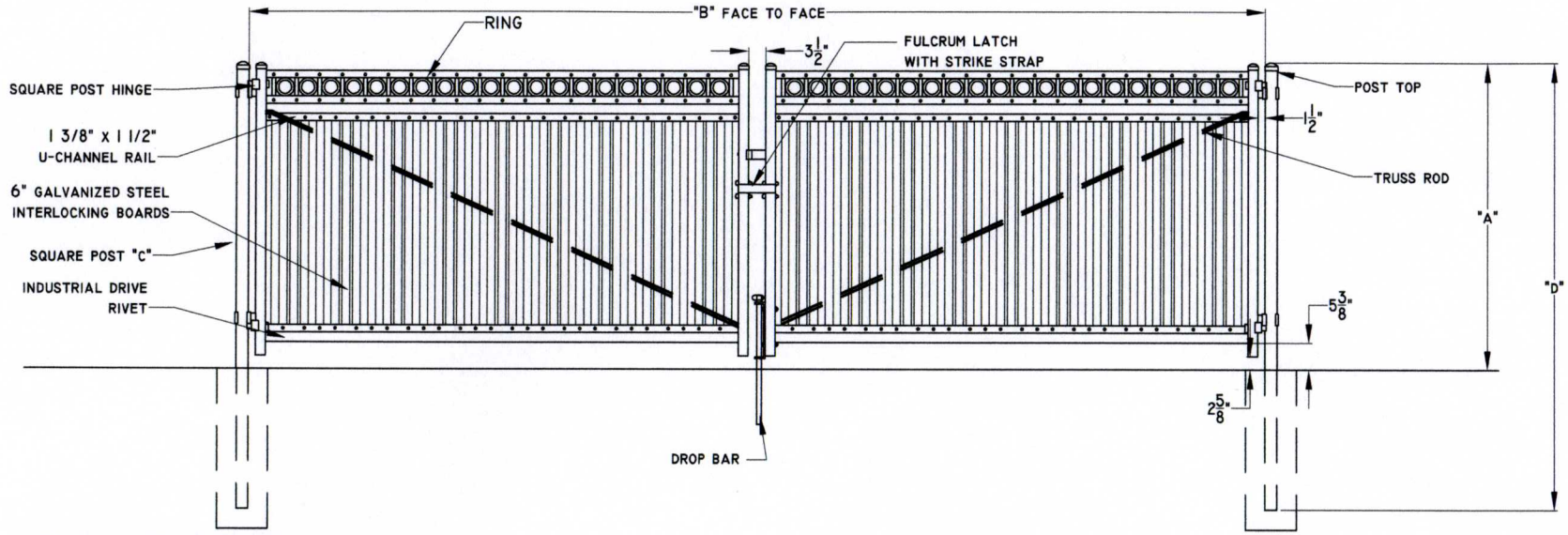

B ____ " FACE TO FACE OF POSTS
C ____ " POST SIZE ____ GAUGE
D ____ " POST LENGTH

NOM HEIGHT (A)
3' - 0"
3' - 6"
4' - 0"
5' - 0"
6' - 0"
7' - 0"
8' - 0"

GATE SPECIFICATIONS

NOTES:

1. SPECIFICATIONS SHOWN CAN BE CHANGED ONLY BY THE MANUFACTURER.
2. FOOTING WIDTH TO BE (4) X POST WIDTH.

SUBMITTED BY:	SUBMITTED TO:	PRIVACY SERIES - DOUBLE SWING GATE PLUS 1 ROW OF RINGS	CONTRACTOR	IRONWORLD FENCING.COM
			ARCHITECT	
		JOB/PROJECT	ENGINEER	DWG NO. IWF 1000

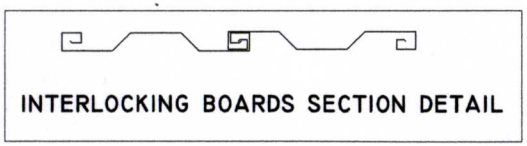

INTERLOCKING BOARDS SECTION DETAIL

IRON WORLD

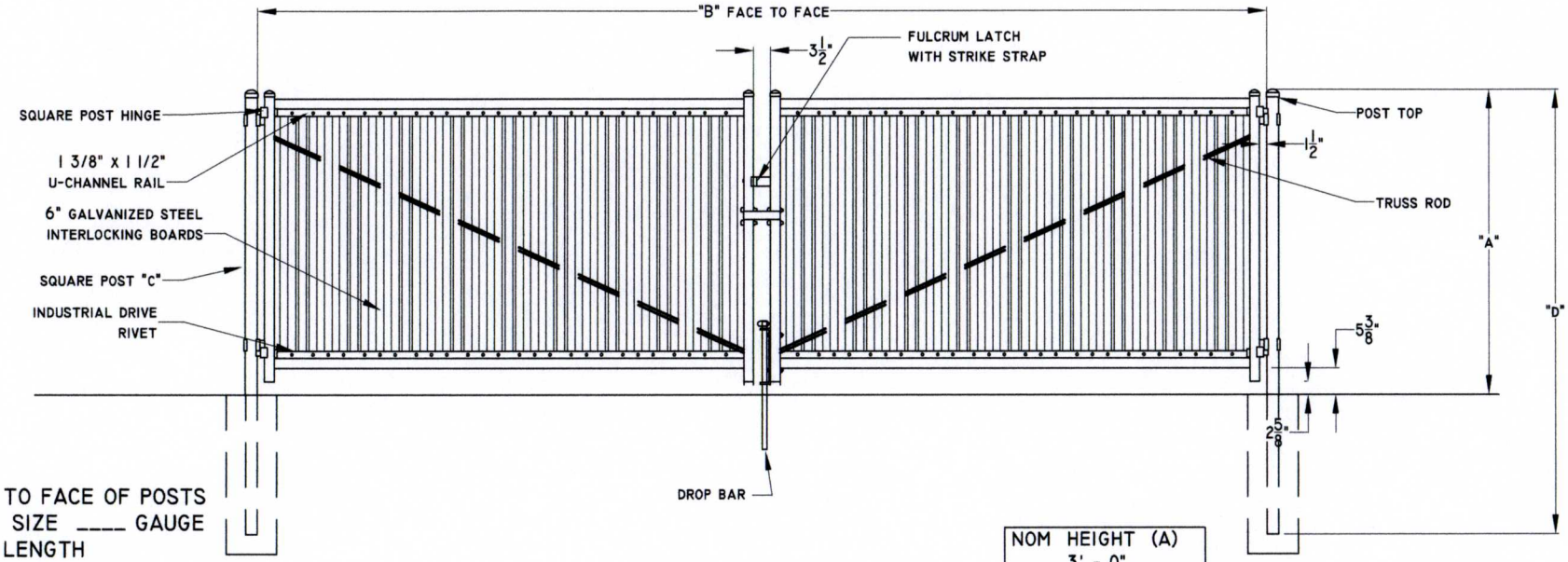

B ____ " FACE TO FACE OF POSTS
C ____ " POST SIZE ____ GAUGE
D ____ " POST LENGTH

NOM HEIGHT (A)
3' - 0"
3' - 6"
4' - 0"
5' - 0"
6' - 0"
7' - 0"
8' - 0"

GATE SPECIFICATIONS

NOTES:

1. SPECIFICATIONS SHOWN CAN BE CHANGED ONLY BY THE MANUFACTURER.
2. FOOTING WIDTH TO BE (4) X POST WIDTH.

SUBMITTED BY:	SUBMITTED TO:	PRIVACY SERIES - DOUBLE SWING GATE	CONTRACTOR	IRONWORLD FENCING.COM
			ARCHITECT	
		JOB/PROJECT		DWG NO.
			ENGINEER	IWF 1000

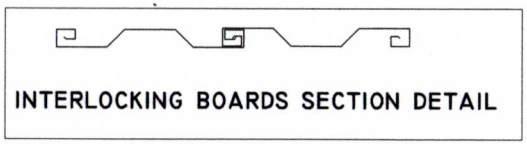

INTERLOCKING BOARDS SECTION DETAIL

IRON WORLD

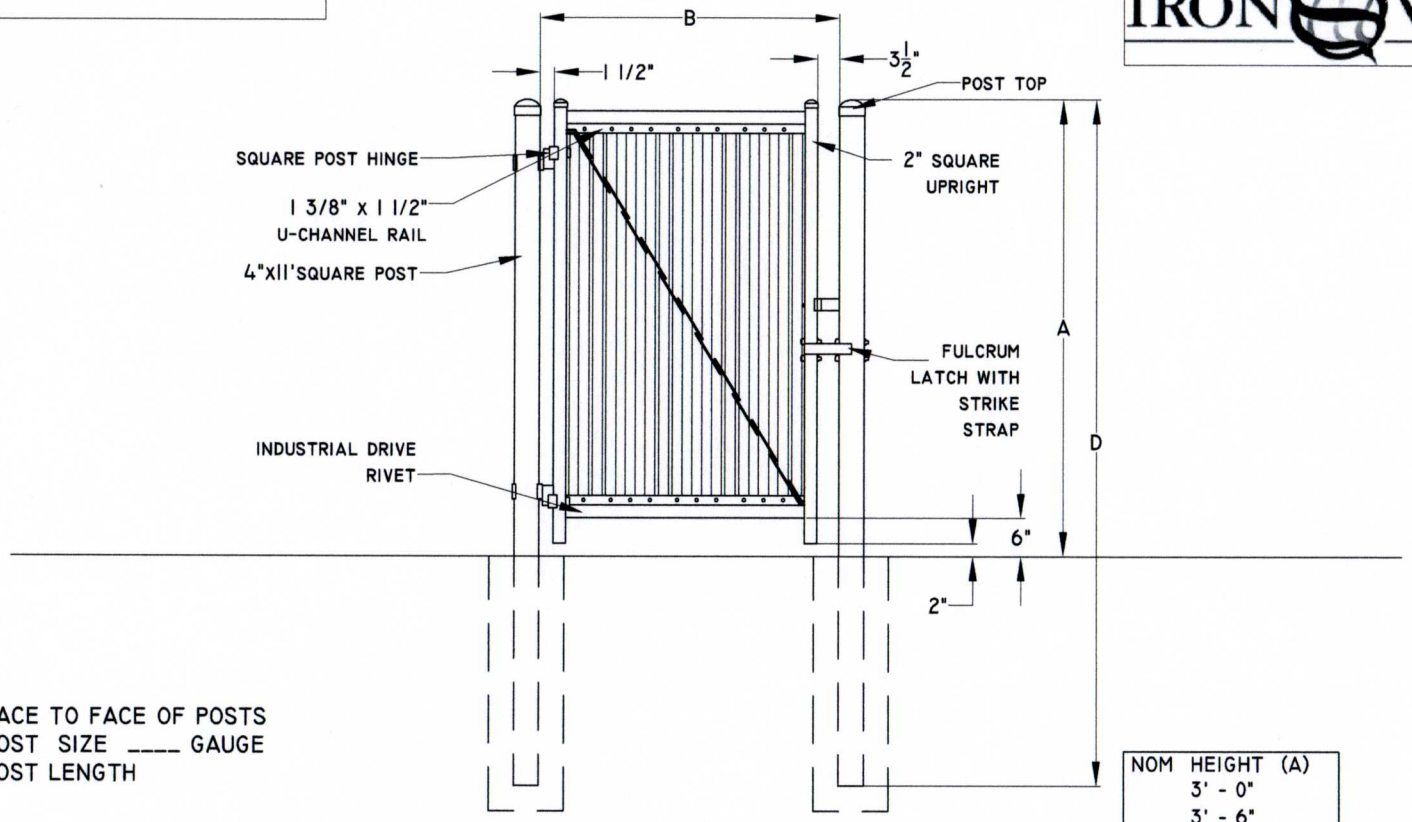

B ____ " FACE TO FACE OF POSTS
C ____ " POST SIZE ____ GAUGE
D ____ " POST LENGTH

NOM HEIGHT (A)
3' - 0"
3' - 6"
4' - 0"
5' - 0"
6' - 0"
7' - 0"
8' - 0"

GATE SPECIFICATIONS

NOTES:

1. SPECIFICATIONS SHOWN CAN BE CHANGED ONLY BY THE MANUFACTURER.
2. FOOTING WIDTH TO BE (4) X POST WIDTH.

SUBMITTED BY:	SUBMITTED TO:	PRIVACY SERIES - SINGLE SWING GATE	CONTRACTOR	IRONWORLD FENCING.COM
			ARCHITECT	
		JOB/PROJECT	ENGINEER	DWG NO. IWF 1000

INTERLOCKING BOARDS SECTION DETAIL

IRON WORLD

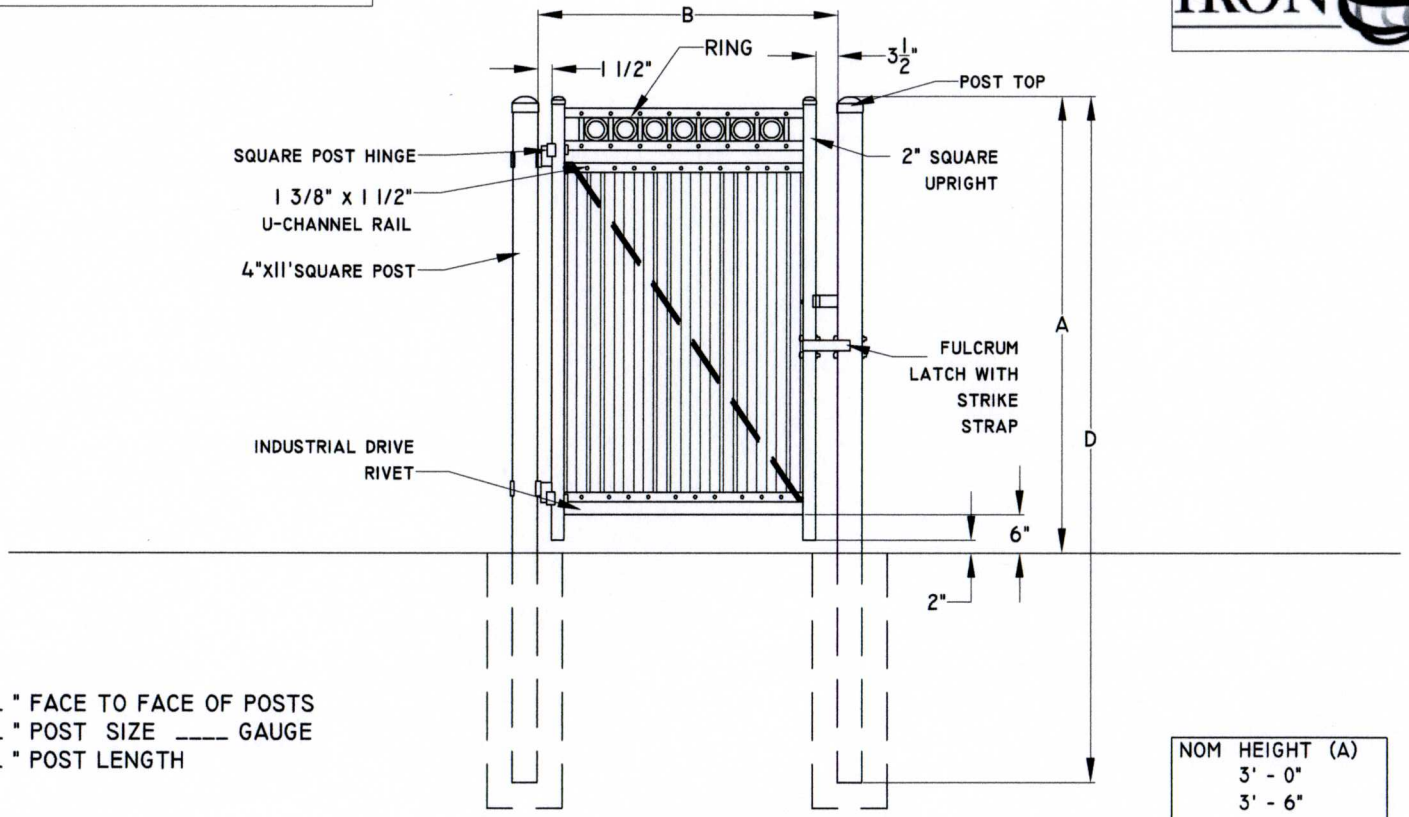

B ____ " FACE TO FACE OF POSTS
C ____ " POST SIZE ____ GAUGE
D ____ " POST LENGTH

NOM HEIGHT (A)
3' - 0"
3' - 6"
4' - 0"
5' - 0"
6' - 0"
7' - 0"
8' - 0"

GATE SPECIFICATIONS

NOTES:

1. SPECIFICATIONS SHOWN CAN BE CHANGED ONLY BY THE MANUFACTURER.
2. FOOTING WIDTH TO BE (4) X POST WIDTH.

SUBMITTED BY:	SUBMITTED TO:	PRIVACY SERIES - SINGLE SWING GATE PLUS 1 ROW OF RINGS	CONTRACTOR	IRONWORLD FENCING.COM
			ARCHITECT	
		JOB/PROJECT	ENGINEER	DWG NO. IWF 1000